FEMALE END VIEW	MALE END VIEW
J1-J4	P1

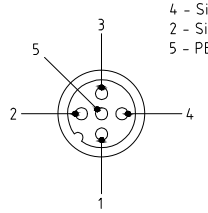

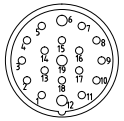

SPECIFICATIONS	
HOUSING MATERIAL/COLOR	NYLON/BLACK
CONTANCT CARRIER MATERIAL/COLOR	TPU/BLACK
CONTACTS	BRASS/GOLD
RECEPTACLE MATERIAL/PLATING	BRASS/NICKEL
O-RING MATERIAL	FPM/FKM
OPERATING CURRENT	2A PER SIGNAL,9A TOTAL
OPERATING VOLTAGE	10-30V
OPERATING TEMPERATURE	-25°C — +85°C
PROTECTION CLASS	IEC IP67

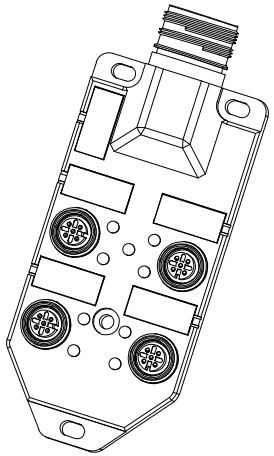

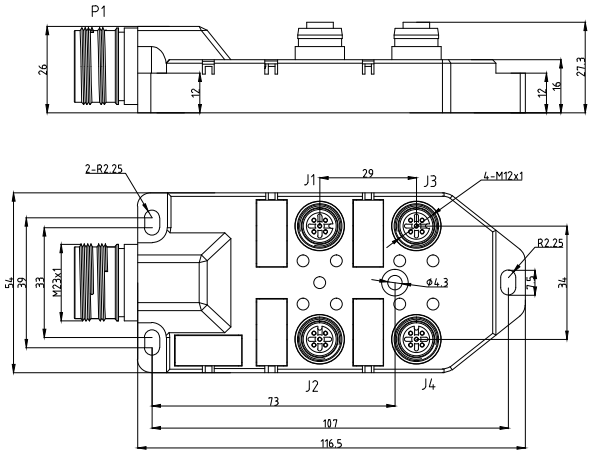

WIRING DIAGRAM

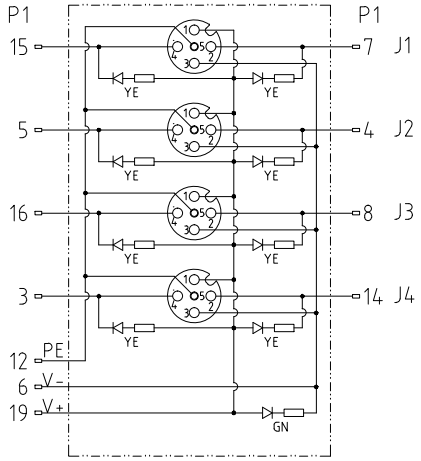

REV	COUNT	DESCRIPTION OF REVISIONS	BY	CHECKED	DATE

UNIT OF MEASUREMENT
MILLIMETER

GSEE TECH
Tianjin Geneuo Technology Co.,Ltd

Approved: Date:
Process: Date:
Checked: Date:
Designed: Date:

Date: 2018.5.16
Scale: 1:1
3RD Angle Projection

Description: JB4M12-4N-R

www.gsee-tech.cn
www.gsee-tech.com
SOURCE DRAWING-FOR REFERENCE ONLY

REV A