FEMALE END VIEW	MALE END VIEW
J1-J12 1 - V+ 3 - V- 4 - Signal	P1 1=J1/4 2=J2/4 3=J3/4 4=J4/4 5=J5/4 7=J6/4 8=J7/4 9=J8/4 10=J9/4 11=J10/4 13=J10/4 14=J12/4 19=V+ 6=V-

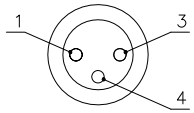

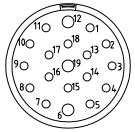

SPECIFICATIONS	
HOUSING MATERIAL/COLOR	NYLON/BLACK
CONTANCT CARRIER MATERIAL/COLOR	NYLON/BLACK
CONTACTS	BRASS/GOLD
RECEPTACLE MATERIAL/PLATING	BRASS/NICKEL
O-RING MATERIAL	FPM/FKM
OPERATING CURRENT	2A PER SIGNAL,6A TOTAL
OPERATING VOLTAGE	10-30V
OPERATING TEMPERATURE	-25°C — +85°C
PROTECTION CLASS	IEC IP67

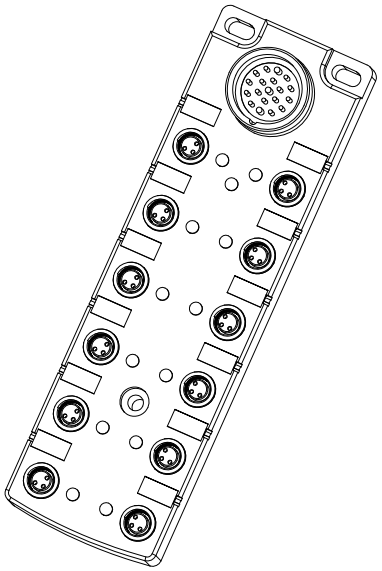

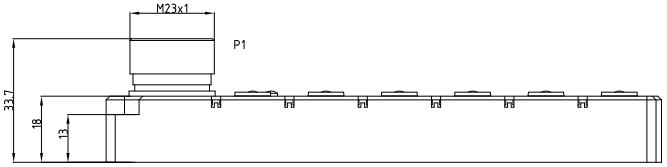

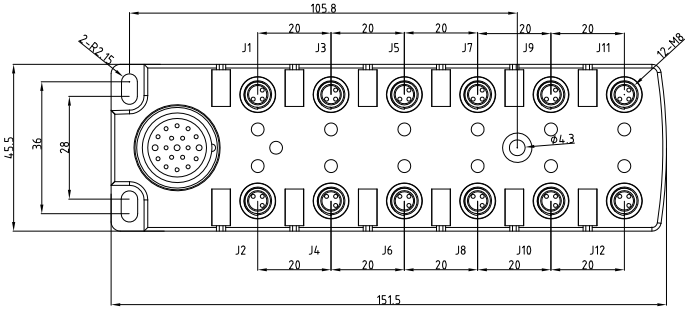

WIRING DIAGRAM

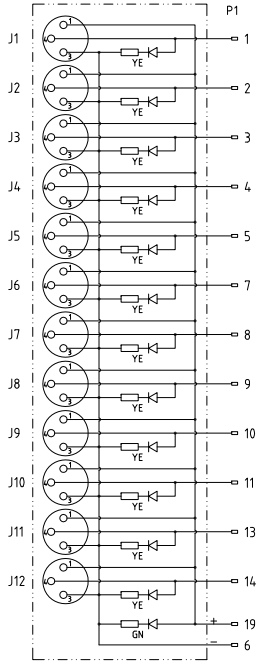

REV	COUNT	DESCRIPTION OF REVISIONS	BY	CHECKED	DATE

UNIT OF MEASUREMENT MILLIMETER	Tianjin Geneuo Technology Co.,Ltd		
Approved: Date:	Date: 2017.5.30	Description: JBW12M8-3P-T	
Process: Date:	Scale: 1:1		
Checked: Date:	3RD Angle Projection	www.gsee-tech.cn www.gsee-tech.com	REV A
Designed: Date:		SOURCE DRAWING-FOR REFERENCE ONLY	